IXXI

Art Frame®

Manual

What's in the box?

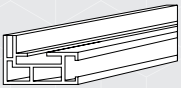

Frame parts
4 pcs

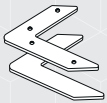

Corner connectors
4 pcs

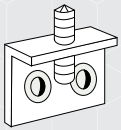

Wall brackets
4 pcs



Swappable Print
1 pc



Allen key
1 pc

Also needed (not included)



Screws
8 pcs



Wall plugs
8 pcs

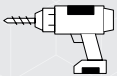

Drill
1 pc



Spirit level
1 pc

IXXI

STEP 1

Lay the Frame out on the floor

This is the front
(this side is open)

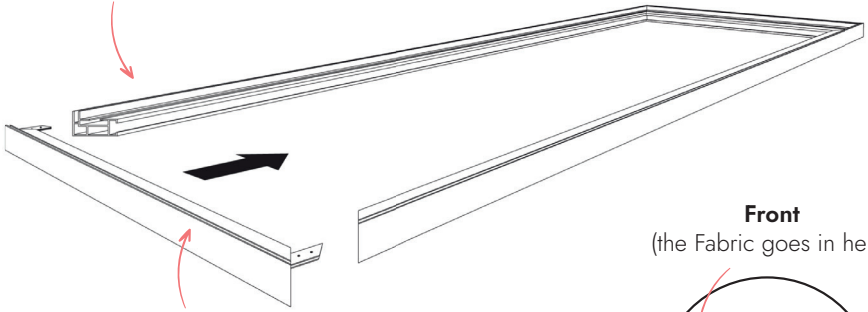

This is the back
(this side is closed)

Front
(the Fabric goes in here)

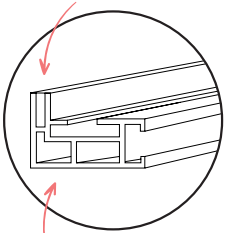

Back
(rests against the wall)

IXXI

STEP 2

Slide the Corner Connectors into the Frame parts and tighten them

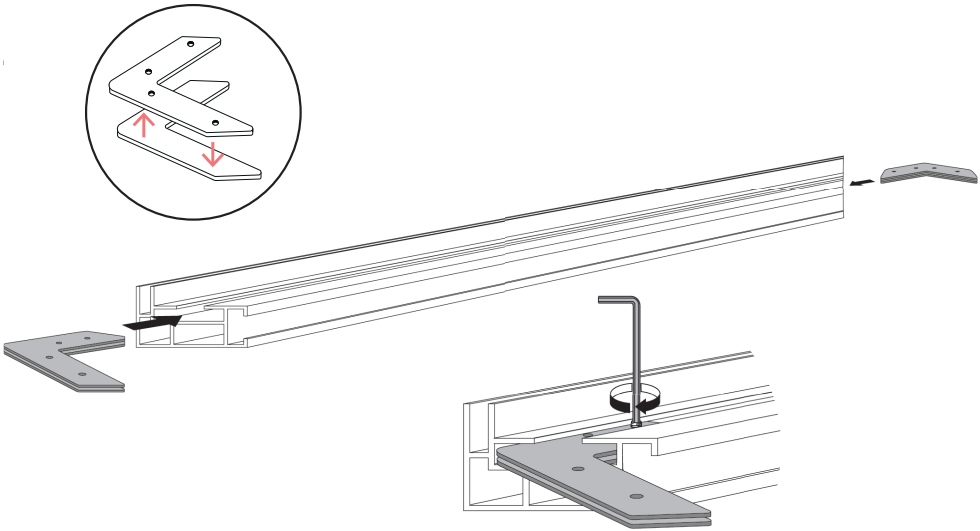

STEP 3

Screw the Wall Brackets to the wall

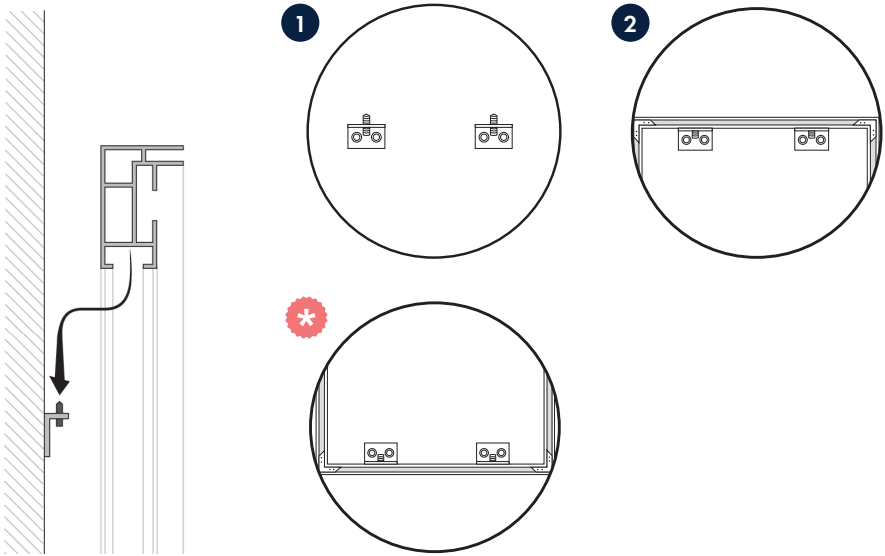

1. Mount two Wall Brackets to hang the top of the frame on.
2. Place the Frame on the two Wall Brackets.

* **Optional:** Mount the two remaining Wall Brackets at the bottom of the frame for extra stability.

IXXI

STEP 4

Level the Frame

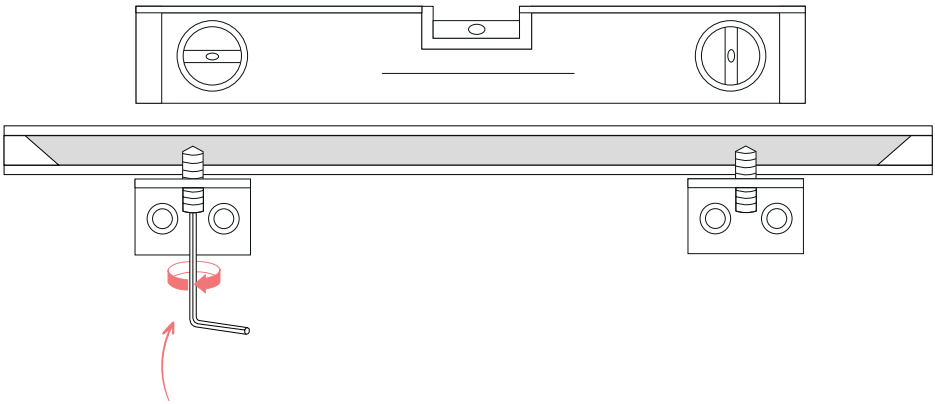

Turn the screw from below with the Allen Key to level the Frame.

STEP 5

Press the Rubber Edge into the Frame

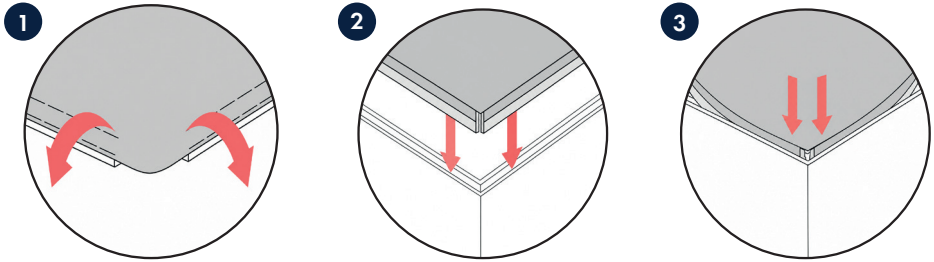

Tip: Start at the corners. This makes it easier to fit the Fabric.
Position the Fabric so that no white Rubber Edge is visible from the front.

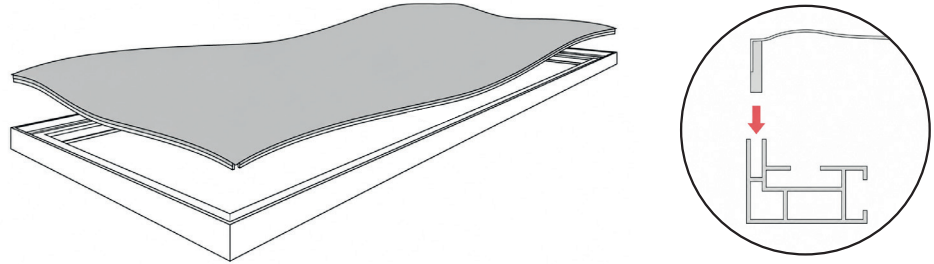

Tip: Once the Frame is level, take it down again and lay it down carefully to stretch the Fabric into it.

STEP 6

Hang your Frame on the wall

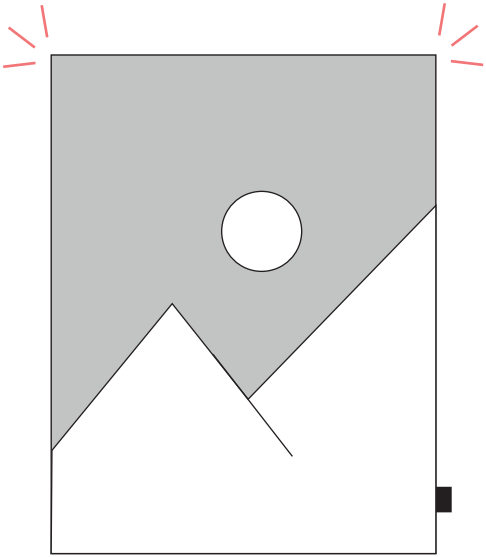

Done. It's up!

Now sit back and enjoy your new
IXXI Art Frame®.